Fuglehus tårn

Med brandmandsstang

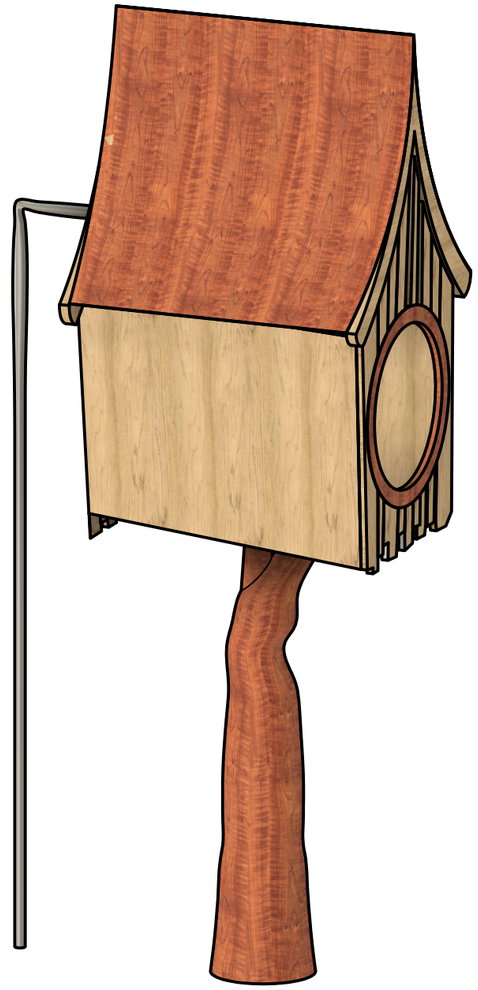

Dimensions:	ca.180x120cm (LxB)
Overall height:	ca.410cm
Free fall height:	ca.200cm
Age range:	4-15
Amount of users:	3
Material:	Larch, Oak
Impact absorbing surface required:	Yes
Mounting:	Cast in concrete
Optional:	Mesh tunnel, slide, nets

Product complies with EN1176 and EN1177

CERTIFICERET LEGEPLADS

Eventyrleg

EN VERDEN AF FANTASI

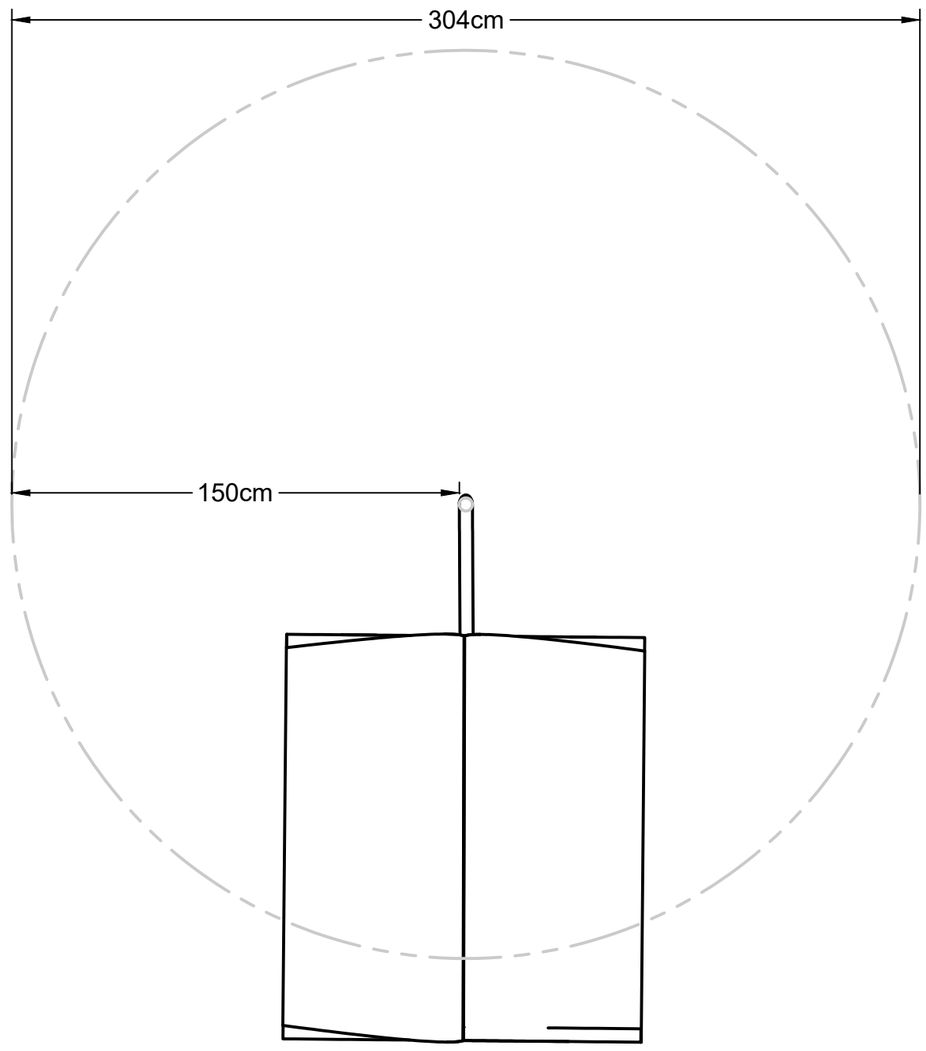

Safety zone

Product complies with EN1176